PFISTER

Pfirst Series™

Shower Trim-Two Handle

807-PFLC Finish*(C)* ❑

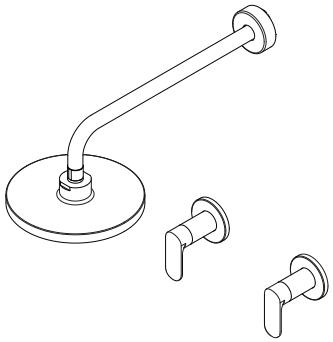

Specifications

Features

- Brass Body
- Shower Head and Flange Included
- 25 Year Mechanical & 5 Year Pfinish Warranty

Dimensions

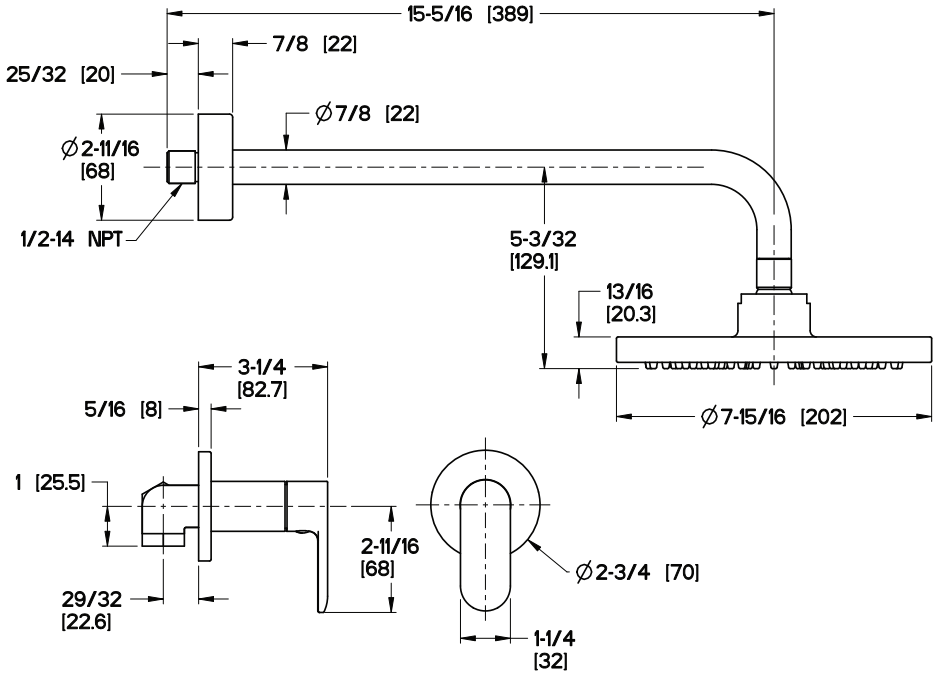

Copyright © 2013, Pfister Inc.